2-ROLL 32” -120” THERMAL IRONER SPECIFICATIONS

2T32-120 DELTA

G.A. BRAUN, INC., P.O. BOX 3029, SYRACUSE, NY 13220-3029, 315-475-3123

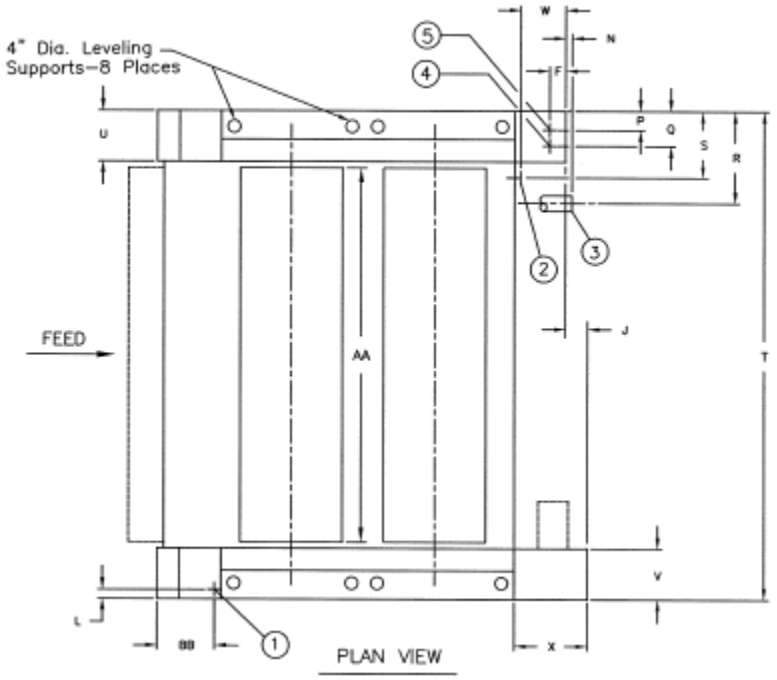

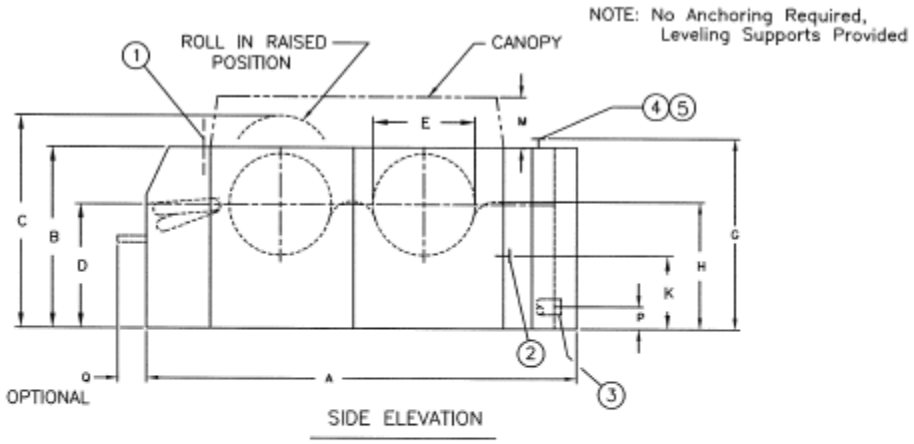

INCHES / MM	INCHES / MM	INCHES / MM	INCHES / MM
A — 136 / 3455	G — 60 / 1525	N — 2 / 50	U — 16 / 405
B — 56 / 1420	H — 40 / 1015	P — 6 / 150	V — 17 / 430
C — 67 / 1700	J — 9 / 230	Q — 11 / 280	W — 14 / 355
D — 36–39 / 915–990	K — 23 / 585	R — 29 / 735	X — 24 / 610
E — 32 / 810	L — 3 / 75	S — 21 / 535	AA — 120 / 3050
F — 5 / 125	M — 16 / 405	T — 157 / 3990	BB — 18 / 460

Specifications subject to change without notice.

2-ROLL 32” -120” THERMAL IRONER SPECIFICATIONS

2T32-120 DELTA

G.A. BRAUN, INC., P.O. BOX 3029, SYRACUSE, NY 13220-3029, 315-475-3123

OPENING REQUIREMENTS TO RECEIVE UNIT
70” x 76”h (1778mm x 1931mm)

OVERALL DIMENSIONS
140” x 175” x 77” h (3556mm x 4445mm x 1956mm h)

SHIPPING DIMENSIONS
159” x 82” x 68” h (4040mm x 2085mm x 1725mm h)
159” x 76” x 72” h (4040mm x 1930mm x 1830mm h)
149” x 30” x 68”h (3785mm x 760mm x 1725mm h)

SHIPPING WEIGHT
15,500 lbs (7,030 Kg)

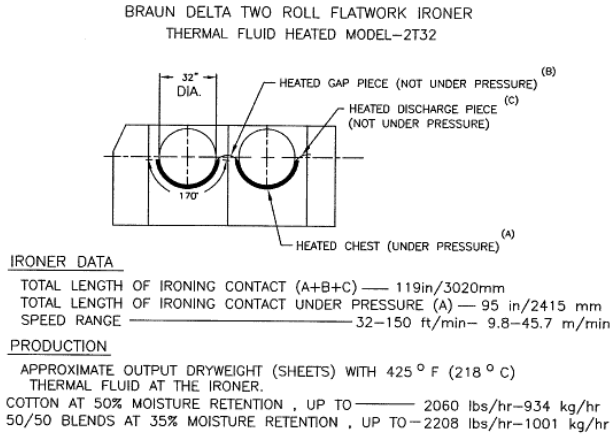

Balloon 1: Electrical Service
*See Electrical Specs below

Balloon 2: Air Specifications
Connection……..3/4”
Pressure……80-100 psi (5.5-7 bar)
Consumption at Rolls Raise……..…9 cfm (0.26 cu-m/min)

Balloon 3: Exhaust Specifications
Duct Diameter…….……5” (127mm)
Flow Rate……..…...400 cfm (11.3 cu-m/min)
Static Pressure of Vacuum Blower…….4 in. H2O max
Max Length with Three 90° Elbows……33 ft. (10m)

Balloon 4: Thermal Fluid Return
Connection…….2-1/2”

Balloon 5: Thermal Fluid Inlet
Connection……..2-1/2”
BTU Maximum……...1,400,000 BTU
BTU Normal Operation……..730,000 BTU
Pressure Drop……..…14 psi (1 bar max)
Heat Radiation……38,500 btu/hr (9,709 kg-cal/hr)

*Note: Nomex Padding is required.

ELECTRICAL SPECS

SERVICE	208/3/60	240/3/60	480/3/60	600/3/60
Circuit Breaker (AMPS) ❸	150 AMP	125 AMP	100 AMP	60 AMP
Machine (FLA)	104.5 A	96 A	52 A	42.5 A
Primary Motor – 20 HP (FLA)	55A	51A	25.7A	20.5A
Exhaust Motor – (2) 2.2 HP (FLA)	14.6A	13.2A	6.6A	6A
Feeder Machine (FLA) (OPTIONAL)	18A	16.5A	10A	8A
Folder Machine (FLA) (OPTIONAL)	17A	15.5A	10A	8A

❶ THHN 90°C copper wire at 30°C (86°F) ambient
❸ Match smaller of wire amp or maximum allowed rating
❹ Consult factory specifications for other services upon request
Provide 5ft flexible connection

As of this writing, the minimum clearance required by U.S. National Electric Code, from electrical box to any object is:
36” if object is an ungrounded (insulated wall)
42” if object is a grounded wall (ie. Bare concrete, brick, etc.)
48” if object is any live part
Check your local electrical codes for further restrictions

Specifications subject to change without notice.