TOP-SIDE LOADER WASHER/EXTRACTOR SPECIFICATIONS

TSL 600 MEDICARE – 3 POCKET (600NMTVP-3)

G.A. BRAUN, INC., P.O. BOX 3029, SYRACUSE, NY 13220-3029, 315-475-3123

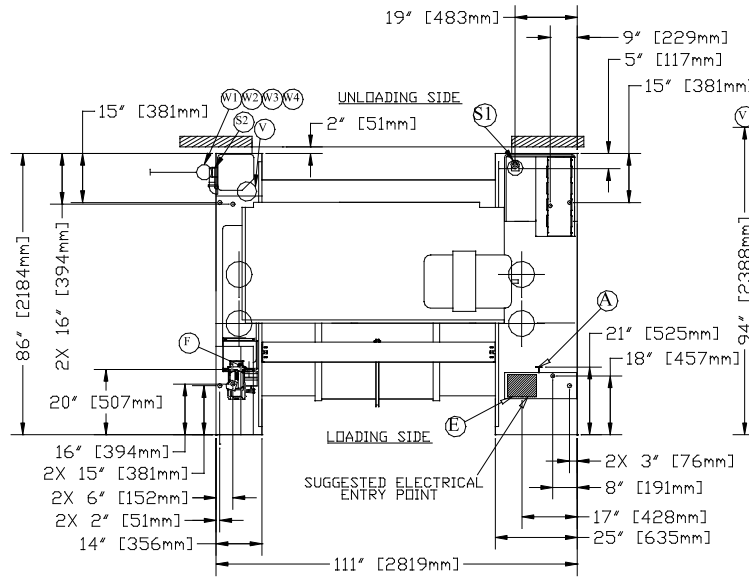

PLAN VIEW

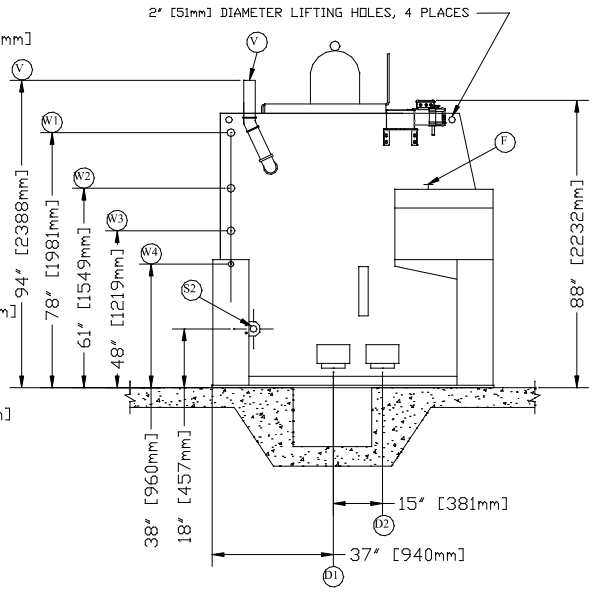

LEFT SIDE VIEW

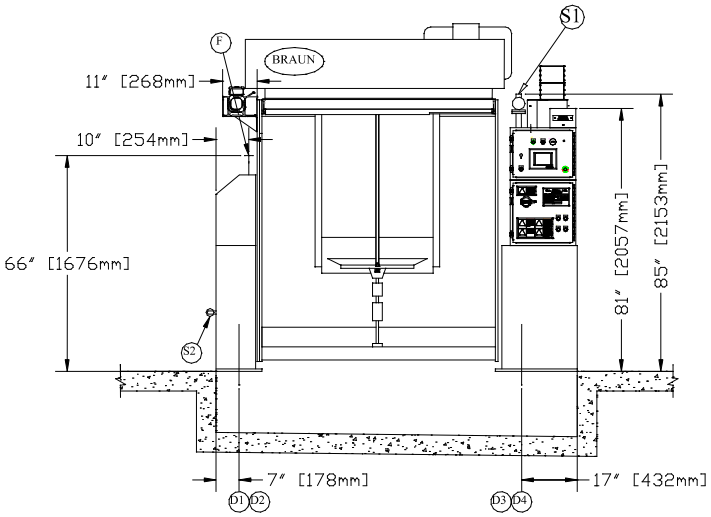

FRONT VIEW

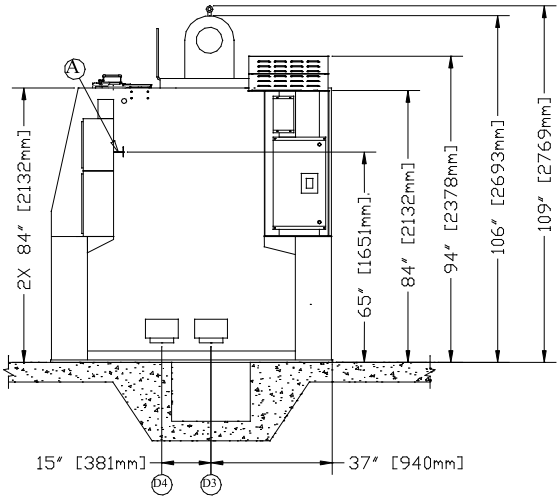

RIGHT SIDE VIEW

NOTE:
All dimensions shown are rounded up to the nearest inch to get even dimensions.

TOP-SIDE LOADER WASHER/EXTRACTOR SPECIFICATIONS

TSL 600 MEDICARE – 3 POCKET (600NMTVP-3)

G.A. BRAUN, INC., P.O. BOX 3029, SYRACUSE, NY 13220-3029, 315-475-3123

CAPACITY
Dry Weight: 600-700 Lbs [272 - 318 kg]

OPENING REQUIREMENTS TO RECEIVE UNIT
Height: 111" [2,819mm] * Width: 92" [2,337mm] †
Height: 99" [2,515mm] Width: 92" [2,337mm] ‡
(Includes 3" [76mm] rolls)
2" [51mm] clearance all around
† Excluding water manifold
‡ Drive deck, vent pipe and water manifold removed
*Height measurement is taken with eye-bolt removed from the motor
This model is normally shipped with drive.
NOTE: If machine was shipped in a container and/or on a skid, remove upon arrival.

OPENING REQUIREMENTS TO SEAL UNIT IN WALL
Height: 86" [2,184mm]
Width: 79 [2,007mm]

VENT SPECS (V)
3" [76mm] Vent

AIR SPECS (A)
Air Connection: ¼" [6.4 mm]
Flow Rate: 1.3 CFM [614 cm^3/sec]
Pressure: 90-100 PSIG [6.2 – 6.9 bars]
Connection: use minimum 12" [305mm] long flex hose

DRY CHEMICAL SUPPLY FEEDER (F)
½" [12.7mm] Hot Water Connection.
Maximum Temperature: 130ºF. [54ºC]

DRAIN SPECS
8" [203mm]
Discharge Rate 300 GPM [19 liters/sec]
Location D1 or D2 Standard
Location D3 or D4 Special Order

WATER-STEAM CONNECTIONS
Pre-connected valves are mounted horizontally, flexible hose furnished by Braun is mounted between valves and machine. On supply feeder water connection, use flex hose between machine and incoming line.

STEAM SPECS (S)
Steam Connection: 1-1/4" [32mm]
Operating Range: 80-150 PSIG [5.5 – 10.3 bars]
S1: Steam location for D1 or D2
S2: Steam location for D3 or D4 Special Order
Consult Inside Sales for BHP

WATER SPECS
Operating Range: 10-74 PSIG [0.7 – 5.1 bars]
(Consult Inside Sales for Higher Pressures)
W1: Provision for alternate water connection: 2-1/2" [76mm] (Optional-Reuse)
W2: Hot Water Connect: 2-1/2" [63.5mm]
W3: Cold Water Connect: 2-1/2" [63.5mm]
W4: Cold Water Connect: 1-1/4" [32mm] (*Optional* – Wrinkle Arrest)

FLOOR LOADING
The following figures are based on 95% isolation efficiency with a 15% dry weight imbalance

Shipping Weight	17,100 lbs [7,756 kg]
Operating Weight	20,950 lbs. [9,503 kg]
Static Base Plate Loading	899.5 lbs/sq.ft. [4,392 kg/m^2]
Dynamic Base Plate Loading	±50.5 lbs/sq.ft. [247 kg/m^2]
Static Project Area Loading	203.9 lbs/sq.ft. [996 kg/m^2]
Dynamic Project Area Loading	±11.4 lbs/sq.ft. [56 kg/m^2]

Project Area = Base plate area plus 12" [305mm] wide area around the base plates.

ELECTRICAL SPECS

3-PHASE SUPPLY VOLTAGE/FREQUENCY	480/3/60*
Machine Disconnect (Internally Mounted Circuit Breaker) (Amps)	60
Machine Full Load Amps (FLA)	40
Minimum Branch Circuit Requirements (Amps) [See Notes Below]	60

- **Grounding:** Ground machine to an earth ground (zero potential) per National Electric Code (NEC) section 250 and any applicable local codes. Use a ground wire sized in accordance with NEC Table 250.122. Do not rely on conduit, machine anchorage, etc. Connect the ground wire between the ground lug on the incoming power junction box on the machine and the external disconnect box or other location as required to assure a reliable earth ground.
- **Branch Circuit Protection:** Size external fuses or circuit breakers per the recommended minimum branch circuit requirements listed above. Installation of this branch circuit must be in accordance with the National Electric Code (NEC) and any applicable local codes.
  - Use only Dual Element (Time-Delay) fuses FRS (250 to 600V).
  - If an inverse time circuit breaker is to be used instead of fuses, it should have the same characteristics as FRS type fuses.
- **Wire Sizing:** Wire shall be sized in accordance with the National Electric Code and any applicable local codes. The required wire size will vary with the length of the wire run as well as any specific local codes. The use of THHN type copper supply conductors with a minimum of 90 deg C insulation is strongly recommended.

*** All voltages other than shown will require a transformer to either step up or step down voltage to 480/3/60. For 380/3/50 or 380/3/60, please consult sales representative.**

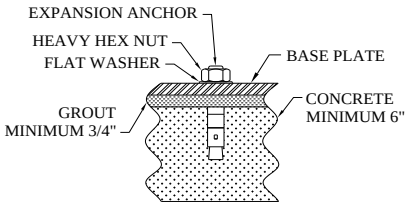

KEEP 1 INCH ANCHORS, 6 INCHES FROM TRENCH WALLS

FOUNDATION
Use a minimum of 3/4" [19mm] grout to level machine.
Floor must be able to support operating weight of machine, minimum of 6" [152mm].

Customer is responsible to meet all Local, State and Federal Code requirements to include obtaining any applicable permits to install or operate this equipment

TOP-SIDE LOADER WASHER/EXTRACTOR SPECIFICATIONS

TSL 600 MEDICARE – 3 POCKET (600NMTVP-3)

G.A. BRAUN, INC., P.O. BOX 3029, SYRACUSE, NY 13220-3029, 315-475-3123

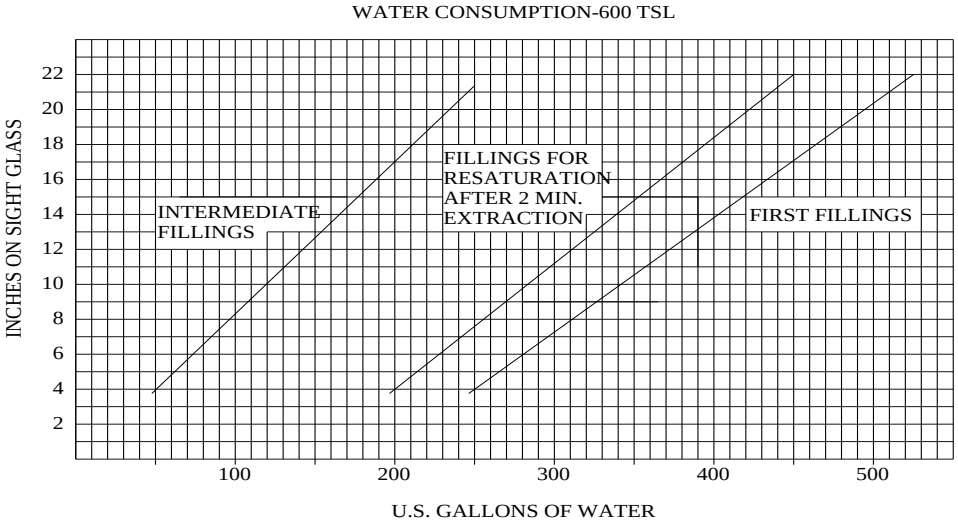

Water consumption may vary with levels used, number of rinses, etc. The above chart will aid in figuring water consumptions for a known wash cycle and levels.

BRAUN WASHER/EXTRACTOR, SIDE-LOADING & UNLOADING TYPE

SUSPENSION MOUNTED, MICROPROCESSOR CONTROL, AUTO-JOG & OPTIONAL WRINKLE ARREST AND SUPPLY DISPENSER

Cylinder Size	60” Diameter x 66” [1,524 x 1,676mm]
Cylinder Volume (Gross)	107.9 ft^3 [3,055 liters]
Recommended Capacity	600-700 Lbs [272 - 318 kg]
Cylinder Opening (Usable)	30” [762mm] Wide x 20” [508mm] High
Cylinder Opening Area	600 $in.^2$ [3,871cm^2]
Cylinder Opening Height	37” [940mm] to 57” [1,448mm]
Cylinder Shaft Size	7” [178mm]
Wash Speed	User Programmable
Balance Speed	User Programmable
Extract Speed	User Programmable (Max. RPM 554)
Extract Motor Size	40 hp
Water Inlet Size	3” [76.2mm]
Water Outlet Size	8” [203mm]

DETAILS:

1. **Materials Used** All parts in contact with the goods processed to be of Type 304 Stainless Steel.
2. **Shell** The right and left side plates, which carry the bearing loads, shall be of reinforced 7/8” Carbon Steel, lined with #16 ga. Type 304 Stainless Steel. The wrap-around casing shall be #11 ga. Type 304 Stainless Steel. A drain trough, to contain the first rush of extracted water, constructed of the same material, shall be pitched ¼” per foot toward the drain valve.
3. **Manual Shell Doors** To be a sliding type, fitted with a weight compensating device, using a self-aligning, non-inflatable door seal. Locking shall be accomplished by pneumatic cylinder, control to be fail safe. Unit to be equipped with one sliding shell door for loading and one flat hinged door for unloading.
4. **Automated Shell Door** A Chain driven, motorized shell door powered by an electric AC motor. Operated by using two-handed control for added safety. Unit to be equipped with one automated sliding shell door for loading and one flat hinged door for unloading.
5. **Sight Glass** shall be provided on the side plate to allow direct visual inspection of water level and wash action.
6. **Drain Valve** 8” diameter to be air operated. Provision for *optional* 8” diameter re-use drain provided.
7. **Water Inlet Valves** The optional re-use valve is a two inch angle seat valve. The optional wrinkle arrest valve is an 1-1/4, if specified, shall be provided with all fittings and flexible connection to unit. Connection to the unit shall be above the overflow and the chemical supply inlets, providing an air gap, making vacuum breakers unnecessary. The Cv for the 2-1/2 inch angle seat valve is 105.3 GPM at a pressure drop of 1 PSI when the media is water at 60 F. (The Flow rate (Q) is calculate using Q = Cv x SQRT (Delta P / S or specific gravity of water is 1)).
8. **Steam Valve** 1-1/4” NPT shall be provided with all fittings and flexible connections to unit. Valve to be air operated, suitable for steam pressures up to 150 PSIG max. Injector holes to be oriented downward, away from cylinder, to prevent contact of live steam with goods processed.
9. **Vent** 3**”** NPT Vent pipe to be provided on top of unit for connection to exterior of building.
10. **Chemical Inlets:**
    Soap chute for the manual addition of chemicals is standard and is located on the shell
    Liquid supply coupling for the addition of liquid chemicals is standard. There is a ¾” stainless-steel fitting located below the water line on the shell for connection of water flushed supply systems only.
    Liquid supply manifold *optional* for the addition of eight liquid chemical supplies is attached to the stationary portion of the machine. Manifold is made of PVC and includes eight ¼” supply couplings and one ½” flush valve. This *option* uses the liquid supply coupling. Consult the factory for other available liquid supply systems.
    Automatic Supply Feeder (Dispenser) *optional* for the automatic injection of supplies, to be of corrosion resistant Stainless Steel and attached to the stationary portion of the machine. Feeder to consist of 5 compartments with one manual over-ride. Feeder is shipped with 5 cups for dry chemicals.

11. **Neutron Suspension** to be an integral part of, and completely assembled to the unit. The suspension mounting shall provide an isolation efficiency of 97% or better for all modes of vibration and shall be completely stable, both statically and dynamically. The unit shall be suspended during all cycles of operation and rest. The suspension system shall not require an external frame around the unit and shall consist of four round wire compression steel springs with hydraulic dampening elements. All unguarded parts of the suspension elements to be accessible for service and inspection purposes without the dismantling of system.

12. **Drive** for washing, balancing and extracting to consist of 1 motor connected to the cylinder shaft by V-belts.

13. **Brake** to act "fail-safe" on a cylinder shaft mounted friction disc brake assembly. Renewable linings to be self-adjusting.

14. **Cylinder** wrapper sheet, dividers and side discs, as well as all reinforcing, to be Type 304 stainless steel. Dividers, side discs and wrapper to be perforated, 11-ga. Material. Cylinder shall be constructed to form 3 offset compartments, minimizing the required reach for loading & unloading to 24" without losing the benefit of the 60" diameter, providing a 51" drop per compartment.

15. **Cylinder Door** Each cylinder compartment shall be equipped with 3 doors, located on the periphery of the cylinder. Each one of the 3 doors shall have a useable opening of 30" x 20" = 600 sq. in. Cylinder doors shall be positionable within the shell door opening for loading and unloading. Positioning the compartments for gravity loading in the soil room shall locate the doors on top of the compartments. Compartment positioning for gravity unloading in the finishing room shall locate the same door on the compartment bottom. This positioning shall locate the doors to allow linen to drop by gravity alone, without redirection, through every part of the cylinder door opening, for both loading and unloading. Each cylinder door shall be one single, complete unit not consisting of various doors. The locking mechanism shall be an integral part of the door, not requiring separate parts or tools for opening or closing.

16. **Cylinder Shaft** Shall extend through cylinder from bearing to bearing and have a minimum diameter of 7" between bearings, to prevent bending during extractions and to assure concentricity of the whole shaft and cylinder.

17. **Cylinder Shaft Seal** shall be of the maintenance-free V-ring type, requiring no adjustments and no lubrication. Two such seals shall be provided for each end of shaft. An additional slinger ring shall be mounted on the shaft between the seal housing and the bearing, and shall be visible for inspection, not requiring disassembly of any part.

18. **Cylinder Shaft Bearings** shall be grease lubricated, 4-7/16" diameter, self-aligning, double row spherical roller bearings with built-in mechanical seals. Bearings to be mounted on platforms and not to be in direct contact with unit side or front plate.

19. **Microprocessor Control** shall automatically actuate filling, draining, extracting, and injecting of supplies and steam. All functions pertaining to washing and extracting, such as actuation of brake, shall be performed automatically without operator's attention. The program shall not advance while filling, signaling or injecting steam. The control shall be of modular construction consisting of plug-in modules, touchscreen programmable with capacity of 255 formulas with up to 90 steps each formula. The operator controls shall be made of a sealed front panel equipped with touchscreen, digital readout for temperature in degrees, level in inches, remaining time of program step in minutes and a backlit touchscreen readout for display of programmed values in English and other languages. Program number and program step shall also be displayed. Built-in intelligence shall provide operator prompting by display of appropriate messages, on one backlit touchscreen readout, to assist in programming, editing, operating and trouble shooting of control and machine. Control shall be capable of testing itself, diagnosing failure and indicating same on readout. Monitoring of motor acceleration must be part of the control capability. Solid state water level and temperature controls with display of actual and programmed values in degrees and inches shall be part of the control. There shall be no limited number of controlled ranges of levels and temperature, but every inch and degree shall be programmable. All drain cycles and one-way drain operations prior to extractions shall be fully automatic and require no programming for time. Start up of extraction shall be prevented in case of insufficient drain. Control to be suitable to accept an additional front panel for remote operator control. A password shall prevent programming by unauthorized personnel. The control shall automatically position the cylinder into an unload position at the end of the cycle and provide auto cylinder positioning for load and unload.

20. **Interlocks & Safety Devices:**
Manual/Automated Shell Door An air actuated door locking device shall prevent the operator from opening the door until the cylinder has stopped. The brake shall be interlocked, requiring it to be engaged in order to unlock the door. Machine shall not permit start up (except for positioning) unless the shell door is closed and locked. Lock to be "Fail-Safe" and prevent release in case of power loss.
Cylinder Positioning Shall require the use of both hands.
A Cylinder Door Stop Shall be provided to serve as a door stop to support the cylinder door in the open position for loading and unloading.
The Brake shall be interlocked to prevent washing or extracting while brake is applied. Brake shall be automatically applied in case of power failure. Interlock shall require the brake to be applied in order to unlock and open the shell door. Brake shall be applied at all times while shell door is open.
A Vibration Sensitive Switch shall be provided to shut-off entire machine, and signal audibly in case of excessive vibration.
Thermal Overload Protection Devices shall be provided for all motors to shut off entire unit and apply brake, signal an alarm in case of overload condition. Devices to be of manual reset type.
Guards shall be provided to cover all moving parts accessible from the floor level.
OSHA Unit shall conform to all requirements

21. **"Wrinkle Arrest"** *Optional* **Feature**: If specified, machine shall be equipped with a device to facilitate gradual cooling to prevent thermal shock to permanent press fabrics. Final temperature and rate of cooling to be adjustable and the whole process to be controlled automatically.

22. **Flap** A hinged shelf shall be provided, to bridge the gap between the cylinder and shell, to prevent small items from falling between them during loading and unloading procedures.

23. **Medicare** (Pass-Thru) Features:
Isolation The machine shall be suitable for installation through a partition wall, completely separating clean and soiled work areas. A flexible enclosure shall be mounted to the machine to seal unit to the wall opening.
Interlocks Shall be provided so that: loading and unloading shell doors cannot be opened simultaneously. The cylinder cannot be inched from opposite side while the loading or unloading shell door is open.
Clean-Side Controls Shall perform functions for operational supervision and unloading, such as: process indication, cylinder positioning and signaling of loading side.
Signals both audible and visual, shall be as follows:

OPERATION	CLEAN UNLOADING SIDE	SOILED LOADING SIDE
Loading Door Open	Visual	-----
Wash	Visual	-----
Brake	Visual	Visual
Extract	Visual	-----
Supply Injection Auto.	-----	Visual
Supply Injection Manual	Visual & Audible	Visual & Audible
End of Cycle	Visual & Audible	Visual & Audible
Unloading Door Open	-----	Visual
Call Loading Room	-----	Visual & Audible
Call Unloading Room	Visual & Audible	-----
Excess Vibration	Audible	Audible

Mediflow *Optional* **Feature** for Cleanroom Machines Only. Unidirectional air flow. The machine shall be constructed to allow positive, one way only, air flow from the atmosphere, through the unit into a negative air pressure soil loading room.

Note:

1. Specifications subject to change without notice.
2. Local codes will take precedence over any information found on this TM Sheet.