END-LOADER WASHER/EXTRACTOR SPECIFICATIONS

EL 200 – 2 POCKET (200NEDPV-2)

G.A. BRAUN, INC., P.O. BOX 3029, SYRACUSE, NY 13220, 315-475-3123

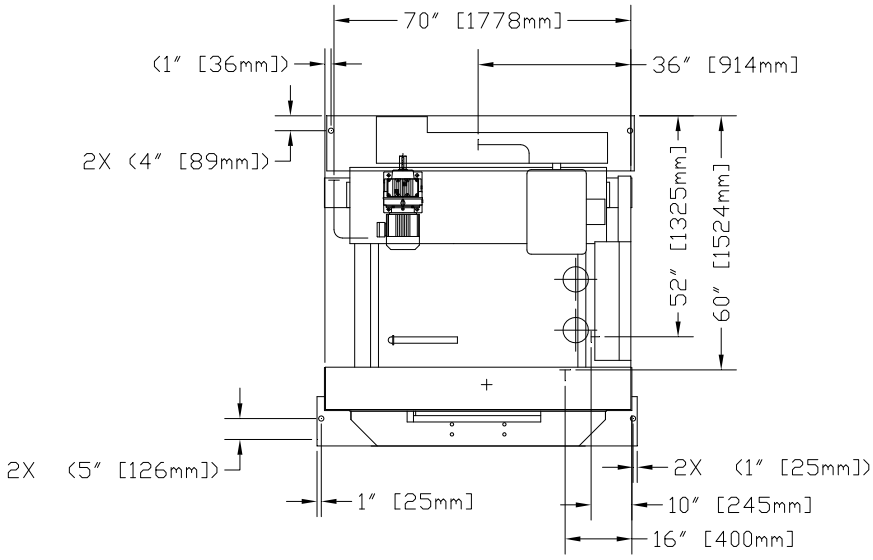

PLAN VIEW

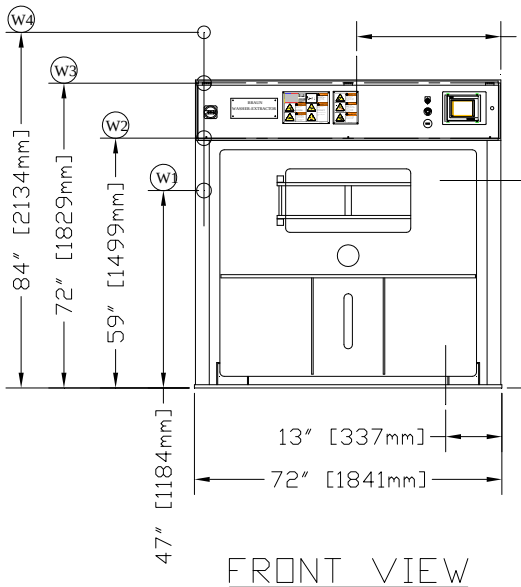

FRONT VIEW

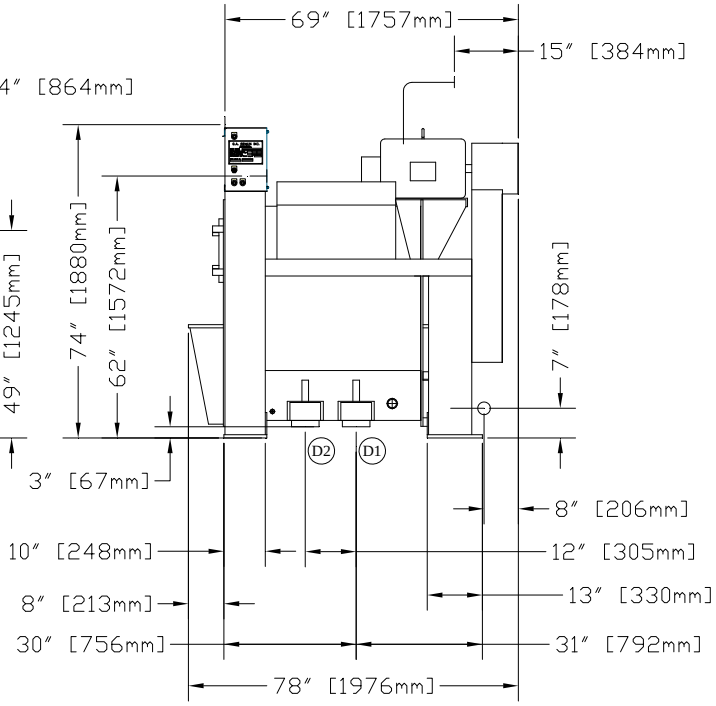

SIDE VIEW

Note:
All dimensions shown are rounded to the nearest ½" to get even dimensions.

END-LOADER WASHER/EXTRACTOR SPECIFICATIONS

EL 200 – 2 POCKET (200NEDPV-2)

G.A. BRAUN, INC., P.O. BOX 3029, SYRACUSE, NY 13220, 315-475-3123

CAPACITY
Dry Weight: 200-230 Lbs [91 - 104 kg]

OPENING REQUIREMENTS TO RECEIVE UNIT
Height: 82" [2,083 mm] Width: 76" [1,930mm]
(Includes 3" [76mm] skids and 3" [76mm] rolls
2"[51mm] clearance all around

VENT SPECS (V)
2" [51mm]Vent

AIR SPECS (A)
Air Connection: ¼" [6.4 mm]
Flow Rate: 1.3 CFM [614 cm^3/sec]
Pressure: 85-100 PSIG [5.9 – 6.9 bars]
Connection: use minimum 12" [305mm] long flex hose

DRY CHEMICAL SUPPLY FEEDER (F) *OPTIONAL*
½" [12.7mm]Hot Water Connection.
Maximum Temperature: 1308F. [728C]

DRAIN SPECS (D)
6" [152mm]
Discharge Rate 220 GPM [17 liters/sec]
Location D1 or D2 Standard

WATER-STEAM CONNECTIONS
Pre-connected valves are mounted horizontally, flexible hose furnished by G.A. Braun is mounted between valves and machine. On *optional* supply feeder water connection, use flex hose between machine and incoming line.

STEAM SPECS (S)
Steam Connection: 3/4" [19.5mm]
Operating Range: 80-150 PSIG [5.5 – 8.6 bars]
Consult Factory for BHP

WATER SPECS (W)
Operating Range: 10-100 PSIG [0.7 – 6.9 bars]
(Consult factory for Higher Pressures)
W1: Provision for alternate water connection: 1-1/4" [32mm]
(*Optional*-Reuse)
W2: Hot Water Connect: 1-1/4" [32mm]
W3: Cold Water Connect: 1-1/4" [32mm]
W4: Cold Water Connect: 3/4" [19mm]
(*Optional* – Wrinkle Arrest)
Note: Valve assembly W1, W2, W3 & W4 will arrive free from W/E and must be anchored with piping by others.

FLOOR LOADING
The following figures are based on 95% isolation efficiency with a 15% dry weight imbalance

Shipping Weight	5,720 lbs [2,595 kg]
Operating Weight	7,187 lbs. [3,260 kg]
Static Base Plate Loading	833.8 lbs/sq.ft. [4,071 kg/m^2]
Dynamic Base Plate Loading	+/- 41.8 lbs/sq.ft. [204 kg/m^2]
Static Project Area Loading	135.3 lbs/sq.ft. [661 kg/m^2]
Dynamic Project Area Loading	+/- 6.8 lbs/sq.ft. [33 kg/m^2]

Project Area = Base plate area plus 12" [305mm] wide area around the base plates.

ELECTRICAL SPECS

3-PHASE SUPPLY VOLTAGE/FREQUENCY	208/3/60	240/3/60	480/3/60
Machine Disconnect (Internally Mounted Circuit Breaker) (Amps)	60	60	30
Machine (FLA)	47	40	20
Wash Motor – 3 HP (FLA)	9.8	8.6	4.9
Extract Motor 2SPD– 10/5 HP (FLA)	41	26	13

- **Grounding:** Ground machine to an earth ground (zero potential) per National Electric Code (NEC) section 250 and any applicable local codes. Use a ground wire sized in accordance with NEC Table 250.122. Do not rely on conduit, machine anchorage, etc. Connect the ground wire between the ground lug on the incoming power junction box on the machine and the external disconnect box or other location as required to assure a reliable earth ground.
- **Branch Circuit Protection:** Size external fuses or circuit breakers per the recommended minimum branch circuit requirements listed above. Installation of this branch circuit must be in accordance with the National Electric Code (NEC) and any applicable local codes.
  - The extract motor is a NEMA Code K and may take up to two minutes to accelerate the cylinder to full speed, during which time the motor draws nearly locked rotor current.
  - Use only Dual Element (Time-Delay) fuses FRN (up to 250V), FRS (250 to 600V).
  - If an inverse time circuit breaker is to be used instead of fuses, it should have the same characteristics as FRN/FRS type fuses.
- **Wire Sizing:** Wire shall be sized in accordance with the National Electric Code and any applicable local codes. The required wire size will vary with the length of the wire run as well as any specific local codes. The use of THHN type copper supply conductors with a minimum of 90 deg C insulation is strongly recommended.

FOUNDATION
Use a minimum of 3/4" [19mm] grout to level machine. Floor must be able to support operating weight of machine, minimum of 6" [152mm].

Customer is responsible to meet all Local, State and Federal Code requirements to include obtaining any applicable permits to install or operate this equipment

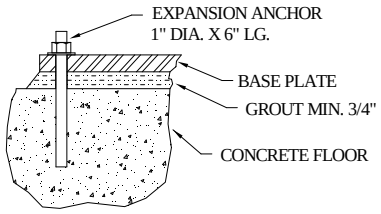

MATCH DRILL IN CONCRETE ANCHOR LOCATIONS USING WASHER BASE PLATE (1" DRILL)
KEEP ANCHORS A MINIMUM OF 6" FROM TRENCH WALLS, ETC.

END-LOADER WASHER/EXTRACTOR SPECIFICATIONS

EL 200 – 2 POCKET (200NEDPV-2)

G.A. BRAUN, INC., P.O. BOX 3029, SYRACUSE, NY 13220, 315-475-3123

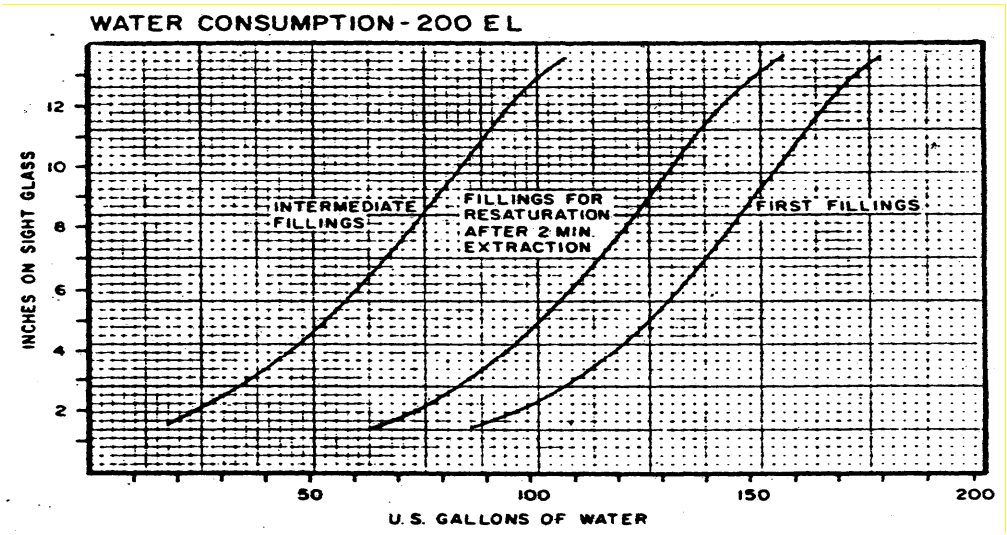

Water consumption may vary with levels used, number of rinses, etc. The above chart will aid in figuring water consumptions for a known wash cycle and levels.

BRAUN WASHER/EXTRACTOR, SIDE-LOADING & UNLOADING TYPE

SUSPENSION MOUNTED, MICROPROCESSOR CONTROL, AUTO-JOG & OPTIONAL WRINKLE ARREST AND SUPPLY DISPENSER

Cylinder Size	44” Diameter x 42” [1,118 x 1,067mm]
Cylinder Volume (Gross)	36.9 ft^3 [1,045 liters]
Recommended Capacity	200 - 230 Lbs [91 - 104 kg]
Cylinder Opening (Usable)	25” [635mm] Wide x 10.875” [276mm] High
Cylinder Opening Area	297 $in.^2$ [1,916cm^2]
Cylinder Opening Height	37.5” [953mm]
Cylinder Shaft Size	5.00” [127mm]
Wash Speed	USER PROGRAMMABLE
Balance Speed	USER PROGRAMMABLE
Extract Speed	USER PROGRAMMABLE
Wash Motor Size	3 hp [2.2kW]
Extract Motor Size	10 / 5 hp [7.5 / 3.7kW]
Water Inlet Size	1-1/4” [32mm]
Water Outlet Size	6” [152mm]

DETAILS:

1. **Materials Used** All parts in contact with the goods processed to be of Type 304 Stainless Steel.
2. **Shell** The front and rear plates, which carry the bearing loads, shall be of reinforced 1/2” carbon steel, lined with #16 ga. Type 304 Stainless Steel. The wrap-around casing shall be #14 ga. Type 304 Stainless Steel. A drain trough, to contain the first rush of extracted water, constructed of the same material, shall be pitched toward the drain valve.
3. **Shell Door** To be self-aligning, flat & hinged, with non-inflatable door seal. Locking shall be accomplished by pneumatic cylinder, control to be fail safe.
4. **Sight Glass** shall be provided on the front plate to allow direct visual inspection of water level and wash action.
5. **Drain Valve** 6” diameter to be air operated. Provision for *optional* 6” diameter re-use drain provided.
6. **Overflow Pipe** To be provided
7. **Water Inlet Valves** One for hot water, one for cold water, one provisional port for *optional* water re-use valve, and one for *optional* wrinkle arrest, if specified, shall be provided with all fittings and flexible connection to unit. Valves to be air operated. Connection to the unit shall be above the overflow and the chemical supply inlets, providing an air gap, making vacuum breakers unnecessary. Connections 1-1/4” NPT, with a flow rate of 32.2 GPM @ 65 PSI per valve, for hot and cold water fill valves only.
8. **Steam Valve** 3/4” NPT shall be provided with all fittings and flexible connections to unit. Valve to be air operated, suitable for steam pressures up to 150 PSIG max. Injector holes to be oriented downward, away from cylinder, to prevent contact of live steam with goods processed.
9. **Vent** 2**”** npt connection to be provided on top of unit for connection to exterior of building.
10. **Chemical Inlets:**
    Soap chute for the manual addition of chemicals is standard and is located on the shell
    Liquid supply coupling for the addition of liquid chemicals is standard. There is a ¾” stainless-steel fitting located below the water line on the shell for connection of water flushed supply systems only.
    Liquid supply manifold *optional* for the addition of eight liquid chemical supplies is attached to the stationary portion of the machine. Manifold is made of PVC and includes eight ¼” supply couplings and one ½” flush valve. This *option* uses the liquid supply coupling. Consult the factory for other available liquid supply systems.

Automatic Supply Feeder (Dispenser) *optional* for the automatic injection of supplies, to be of corrosion resistant Stainless Steel and attached to the stationary portion of the machine. Feeder to consist of 5 compartments with one manual over-ride. Feeder is shipped with 5 cups for dry chemicals.

11. **Neutron Suspension** to be an integral part of, and completely assembled to the unit. The suspension mounting shall provide an isolation efficiency of 97% or better for all modes of vibration and shall be completely stable, both statically and dynamically. The unit shall be suspended during all cycles of operation and rest. The suspension system shall not require an external frame around the unit and shall consist of four round wire compression steel springs with hydraulic dampening elements. All suspension elements to be accessible for service and inspection purposes without the dismantling of system.

12. **Drive** for washing and extracting to consist of 2 motors connected to the cylinder shaft by V-belts and one self-aligning, self-adjusting, air operated clutch.

13. **Brake** to act "fail-safe" on a drum mounted directly to the cylinder shaft. Renewable linings to be self-adjusting.

14. **Cylinder** wrapper sheet, dividers and end discs, as well as all reinforcing, to be Type 304 stainless steel. Dividers, end discs to be un-perforated. Wrapper to be perforated, 11-ga. Material. Size of 5 reinforcing bands shall be 3/16 x 1. Cylinder shall be constructed to form 2 compartments providing a 44" drop per compartment.

15. **Cylinder Door** Each cylinder compartment shall be equipped with 1 door on the front end disc. Each of the 2 doors shall have a useable opening of 296.8 cu. In. Cylinder doors shall be positionable within the shell door for loading and unloading. Each cylinder door shall be one single unit, not consisting of various doors. When opened, doors shall form a loading or unloading shelf, preventing articles from falling between the tub and the cylinder. The locking mechanism shall be an integral part of the door, not requiring separate parts or tools for opening or closing.

16. **Cylinder Shaft** Shall extend through cylinder from bearing to bearing and have a minimum diameter of 5.00" between bearings, to prevent bending during extractions and to assure concentricity of the whole shaft and cylinder.

17. **Cylinder Shaft Seal** shall be of the maintenance-free V-ring type, requiring no adjustments and no lubrication. Two such seals shall be provided for each end of shaft. An additional slinger ring shall be mounted on the shaft between the seal housing and the bearing, and shall be visible for inspection, not requiring disassembly of any part.

18. **Cylinder Shaft Bearings** shall be grease lubricated, 3-7/16" diameter, self-aligning, double row spherical roller bearings with built-in mechanical seals. Bearings to be mounted on platforms and not to be in direct contact with unit side or front plate.

19. **Microprocessor Control** shall automatically actuate filling, draining, extracting, and injecting of supplies and steam. All functions pertaining to washing and extracting, such as actuation of brake, shall be performed automatically without operator's attention. The program shall not advance while filling, signaling or injecting steam. The control shall be of modular construction consisting of plug-in modules, touchscreen programmable with capacity of 255 formulas with up to 90 steps each formula. The operator controls shall be made of a sealed front panel equipped with touchscreen, digital readout for temperature in degrees, level in inches, remaining time of program step in minutes and a backlit touchscreen readout for display of programmed values in English and other languages. Program number and program step shall also be displayed. Built-in intelligence shall provide operator prompting by display of appropriate messages, on one backlit touchscreen readout, to assist in programming, editing, operating and trouble shooting of control and machine. Control shall be capable of testing itself, diagnosing failure and indicating same on readout. Monitoring of motor acceleration must be part of the control capability. Solid state water level and temperature controls with display of actual and programmed values in degrees and inches shall be part of the control. There shall be no limited number of controlled ranges of levels and temperature, but every inch and degree shall be programmable. All drain cycles and one-way drain operations prior to extractions shall be fully automatic and require no programming for time. Start up of extraction shall be prevented in case of insufficient drain. Control to be suitable to accept an additional front panel for remote operator control. A password shall prevent programming by unauthorized personnel. The control shall automatically position the cylinder into an unload position at the end of the cycle and provide auto cylinder positioning for load and unload.

20. **Interlocks & Safety Devices:**
Shell Door An air actuated door locking device shall prevent the operator from opening the door until the cylinder has decelerated to wash speed or lower. The brake shall be interlocked, requiring it to be engaged in order to unlock the door. Machine shall not permit start up (except for positioning) unless the shell door is closed and locked. Lock to be "Fail-Safe" and prevent release in case of power loss.
Cylinder Positioning Shall require the use of both hands.
A Cylinder Door Stop Shall be provided to serve as a door stop to support the cylinder door in the open position for loading and unloading.
The Brake shall be interlocked to prevent washing or extracting while brake is applied. Brake shall be automatically applied in case of power failure. Interlock shall require the brake to be applied in order to unlock and open the shell door. Brake shall be applied at all times while shell door is open.
A Vibration Sensitive Switch shall be provided to shut-off entire machine, and signal audibly in case of excessive vibration.
Thermal Overload Protection Devices shall be provided for all motors to shut off entire unit and apply brake, signal an alarm in case of overload condition. Devices to be of manual reset type.
Guards shall be provided to cover all moving parts accessible from the floor level.
OSHA Unit shall conform to all requirements

21. **"Wrinkle Arrest"** ***Optional*** **Feature**: If specified, machine shall be equipped with a device to facilitate gradual cooling to prevent thermal shock to permanent press fabrics. Final temperature and rate of cooling to be adjustable and the whole process to be controlled automatically.

Note:
1. Specifications subject to change without notice.
2. Local codes will take precedence over any information found on this TM Sheet.